# PreMill

## *HM*

powered by MMD

# Horizontal Center
# HM 400

# Horizontal Center HM 630

# Machine accuracy

All machines are produced in compliance with VDI/DGQpro3441

Laser measuring

Renishaw

Vibrations check milling spindle

| **Accuracy** | | |
|---|---|---|
| Positioning | mm | ±0.005 |
| Repeatability | mm | ±0.003 |

All machines available with direct position sensor Heidenhain

# Control

- Heidenhain iTNC 530/ TNC 640
- Heidenhain TNC 620

  - Siemens 828 D SL
  - Siemens 840 D SL

    - Mitsubishi M70 / 700
    - Fanuc

# Standard equipment

- *Full housing*
- *Chip conveyor with chip containter*
- *Spindlecooling*
- *Cooling with adjustable nozzles*
- *Spindle Air Blast*
- *IKZ prepared*
- *Heat  changer at  electric cabinet*
- *Pallet flushing*
- *Drive Gantry in Y axis (HM 630)*
- *Light in working space*
- *3 colors signal lamp*
- *Electrik handwheel*
- *CE*
- *Manuals*

# Optional equipment

- IKZ 30 / 70 Bar
- Direct measuring system Heidenhain
- Auto. tool measurement
- Auto. workpiece measurement
- Cooled ball screws
- Oil mist lubrication
- NC rotary table index 0.001° oder 5°
- 10000 U/min (direct drive)
- 10000 U/min (motor spindle)
- T – slots in paletts
- 60 / 80 / 100 / 120 tool magazine
- Oil skimmer
- etc.

# Assemblies HM 630

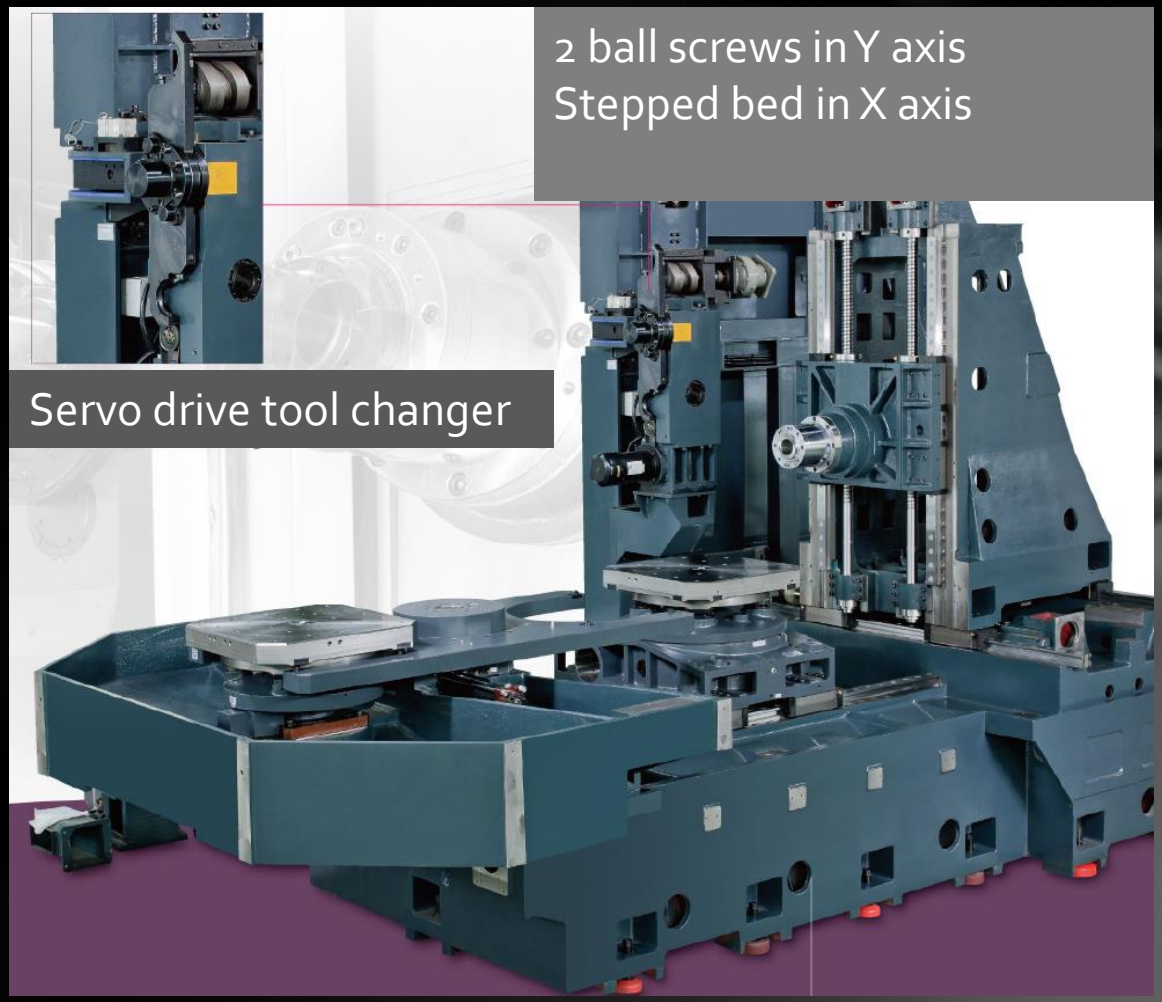
2 ball screws in Y axis
Stepped bed in X axis
Servo drive tool changer

**2 ball screws in Y - axis**

# Stepped bed

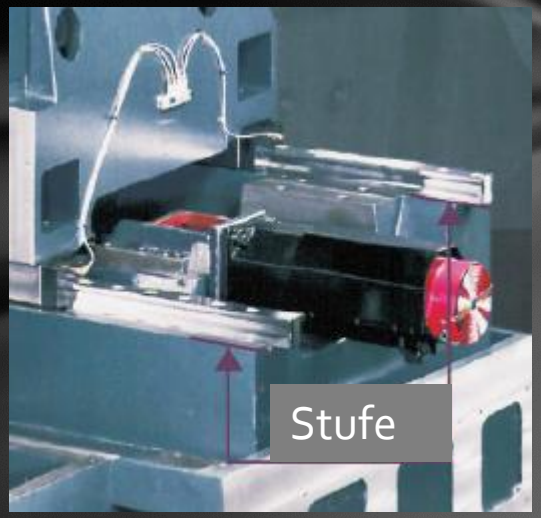

# Central lubrication

LHL system ( grease )

Linear roller bearings

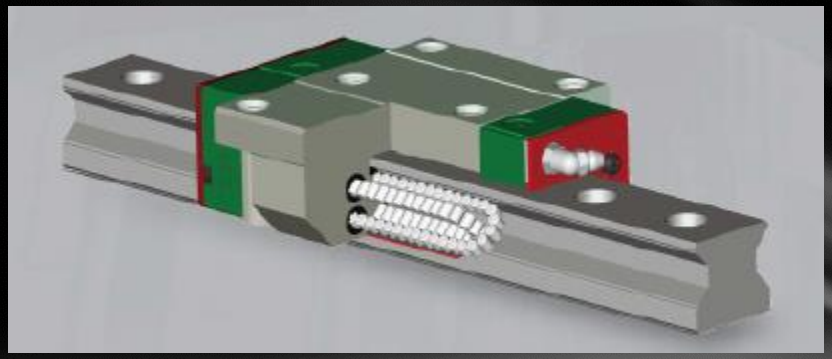

Direct drive

IKZ 30 or 70 Bar

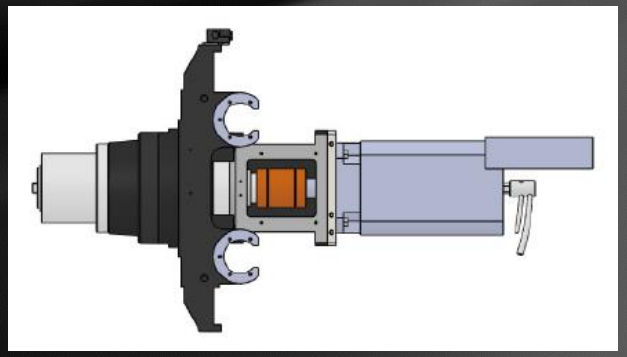

Auto. Pallet changer
B axis 0.001° oder 5°

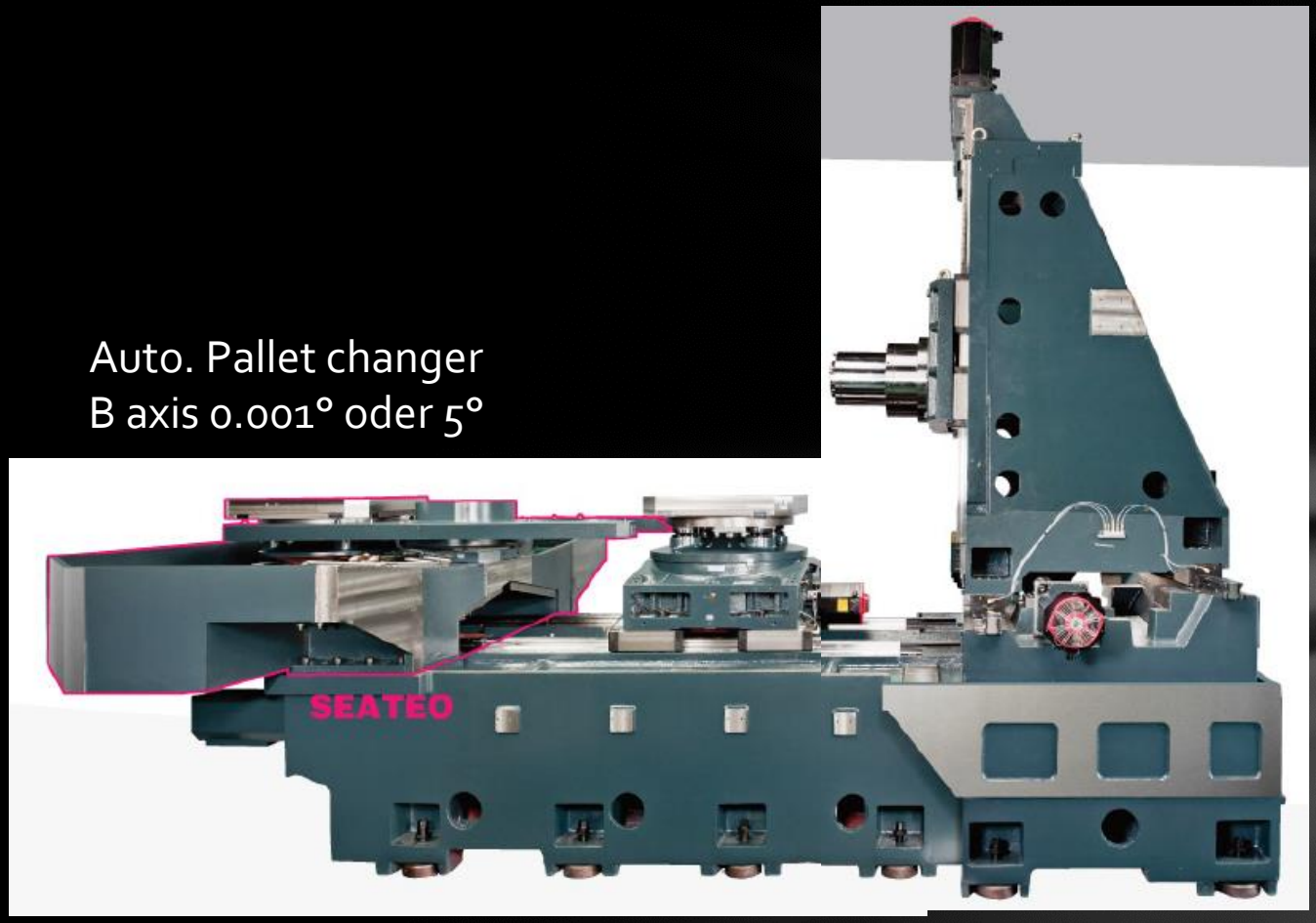

Function of clamping  B axis

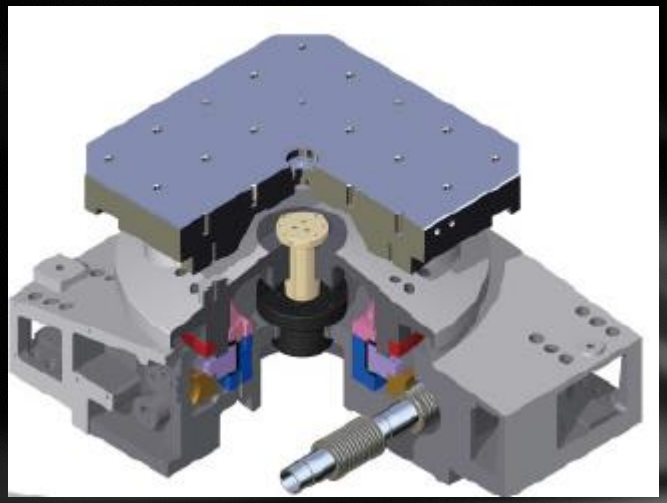

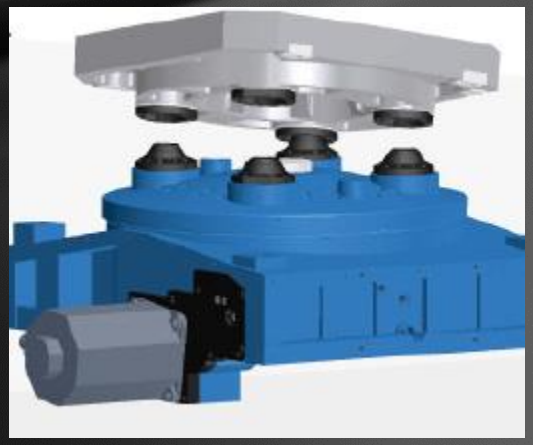

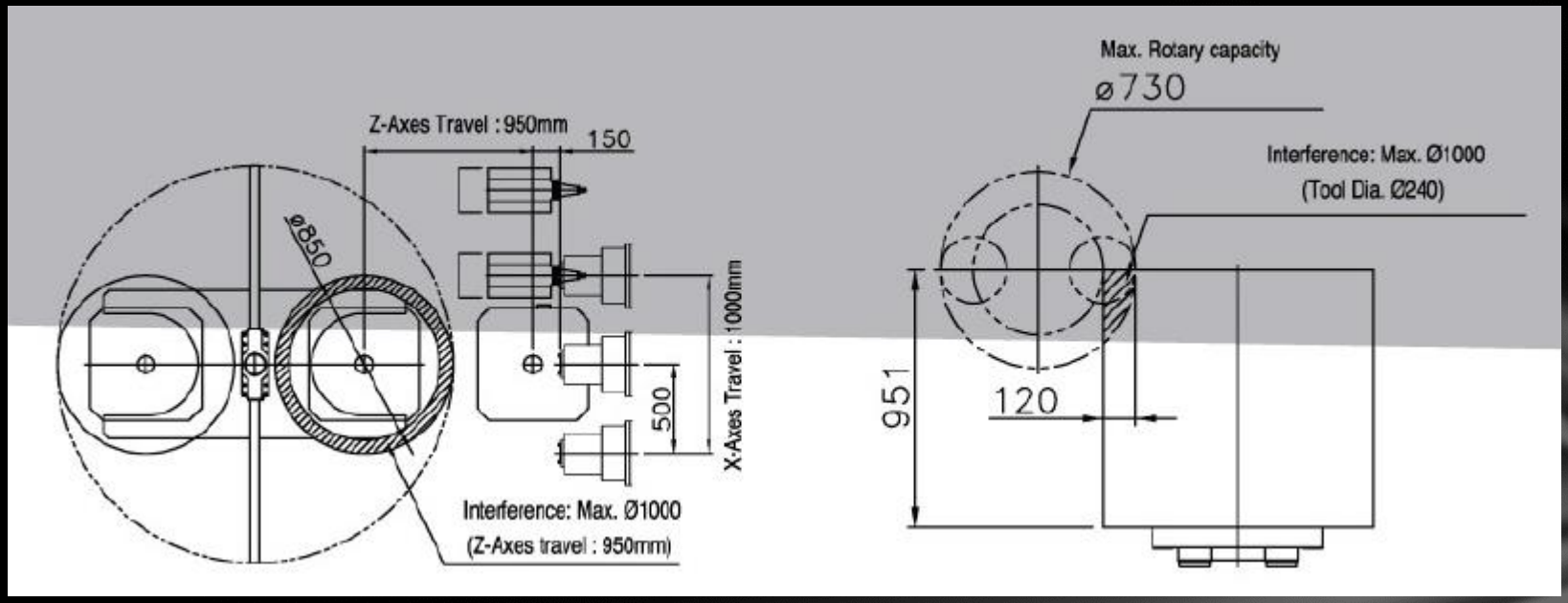


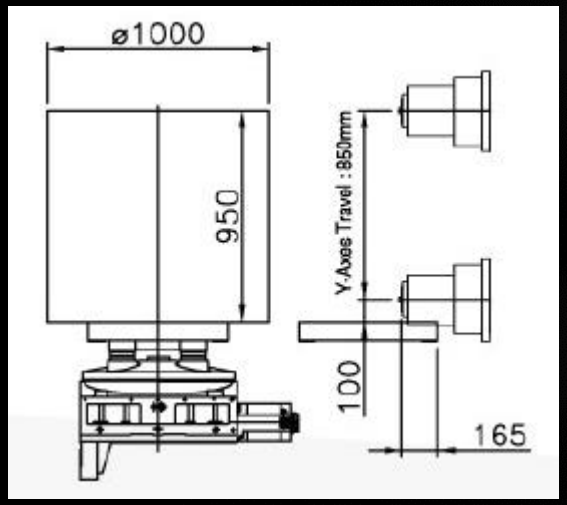


Working space
max. workpiece (HM 630)

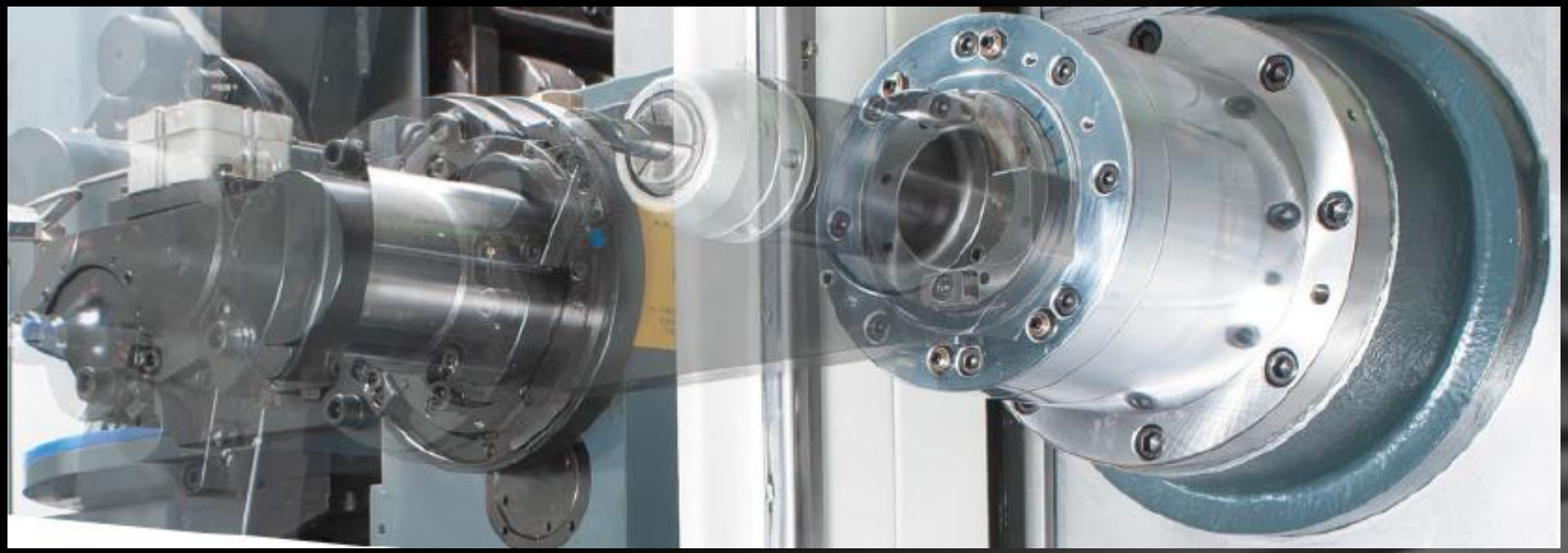

# Tool changer

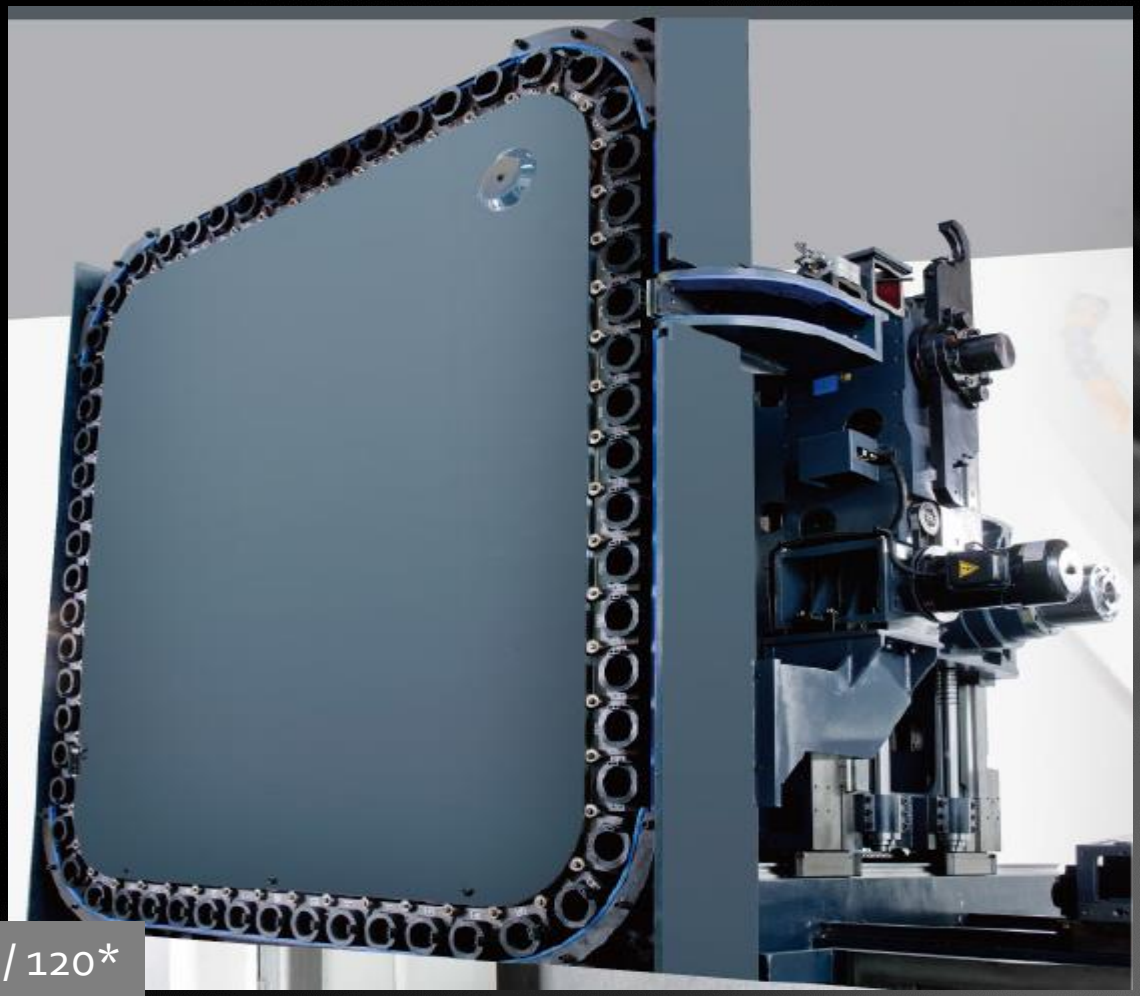

Tool magazine with 40 / 60 / 100 / 120* tools

# Chip clearance

Pallet flushing

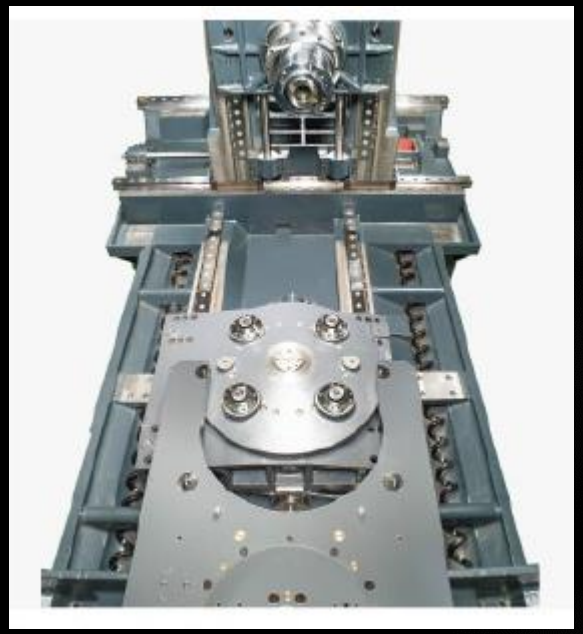

Spiral conveyor

Hinged conveyor

# Dimensions

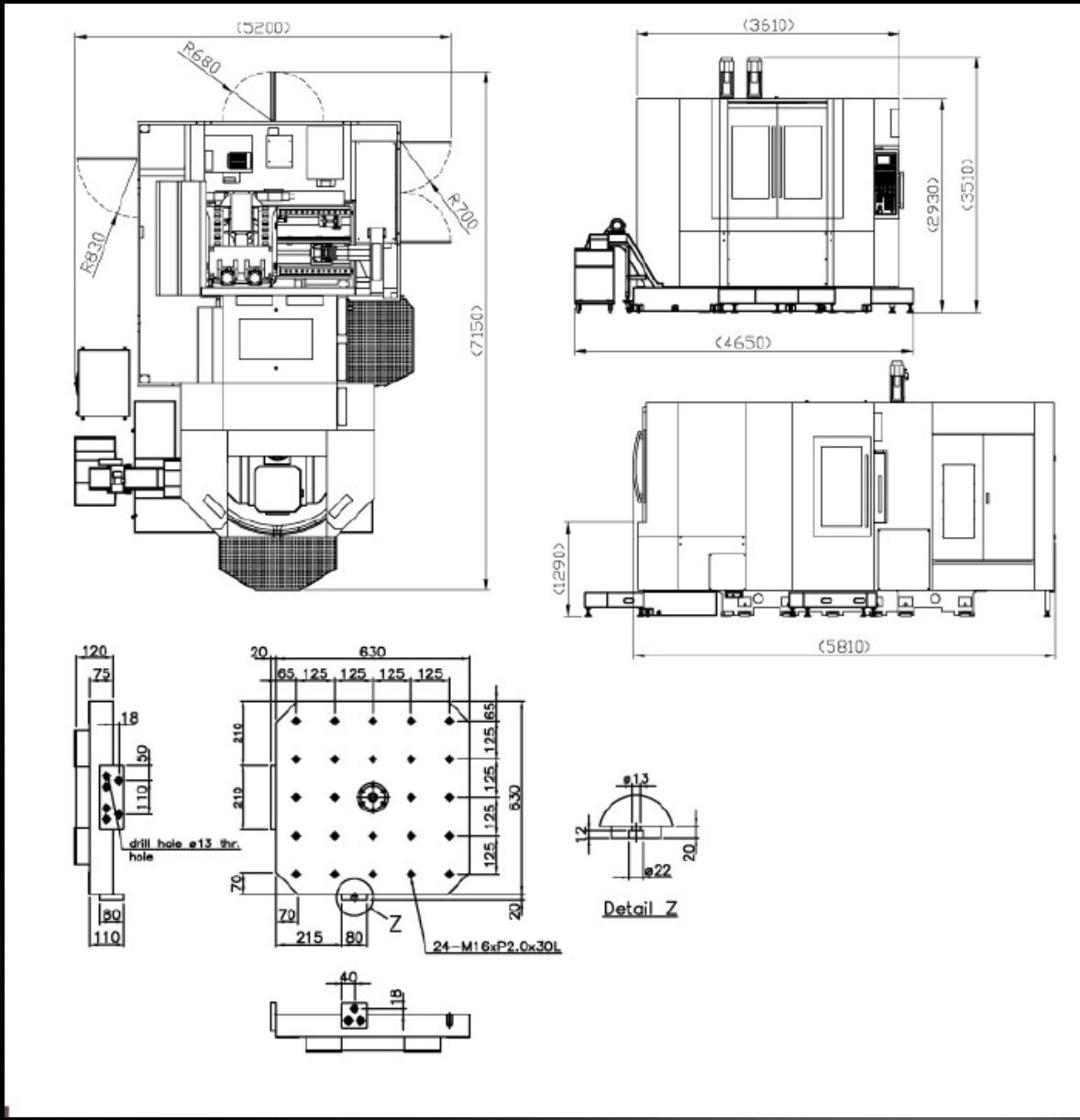
(5200)
R680
R700
R930
(7150)
(3610)
(2930)
(3510)
(4650)
(1290)
(5810)
120
75
18
50
110
drill hole ø13 thr. hole
80
110
20
630
65 125 125 125 125
210
210
125 125 125 125
65
630
70
70
215
80
20
Z
24-M16xP2.0x30L
40
18
ø13
12
20
ø22
Detail Z

# HM 400

# Machine design

Stepped bed X axis

Palett supports

Tool magazine

# Spezificationen

*HM 400 / HM 630*

| | HM 630 | HM 400 |
|---|---|---|
| **Control:** | Heidenhain/Siemens/Fanuc/Mitsubishi | Heidenhain/Siemens/Fanuc/Mitsubishi |
| **Travel:** | | |
| **X - axis** | 1000 mm | 630 mm |
| **Y - axis** | 850 mm | 630 mm |
| **Z - axis** | 950 mm | 630 mm |
| **Spindle centre on palett surface** | 100 - 950 mm | 50 – 680 mm |
| **Spindle nose on palett centre** | 150 - 1100 mm | 130 - 760 mm |
| **Quantity of pallets*** | 2 | 2 |
| **Table dimensions (L/B):** | 630 x 630 mm | 400 x 400 mm |
| **max. dimension of workpiece** | Ø1000 x 950 mm | Ø400mm |
| **max. weight of workpiece** | 1000 Kg | 400 Kg |
| **Time of palett change** | 14-16 sec. | 12 - 20sec. |
| **Indexing** | 0.001° oder 5° | 0.001° oder 5° |
| **U/min** | 11.1 U/min | 11.1 U/min |
| **Main spindle:** | | |
| **Main motor** | 15/18.5 kW | 15/18.5 kW |
| **Power transmission** | direct | Direct |
| **U/min** | 10000/6000 | 10000* |
| **Spindle taper DIN ISO** | SK 40 / SK 50* | SK 40* |
| **Spindle cooling** | Öl | ÖL |
| **Rapid feed X / Y / Z m/min** | 36/36/36 | 36/36/36 |
| **Feed m /min** | 10 | 10 |
| **Accuracy** | | |
| **Positioning accuracy** | ± 0.005 mm | ± 0.005 mm |
| **Repeating accuracy** | ± 0.003 mm | ± 0.003 mm |
| **Tool changer** | | |
| **Magazine/ opt.** | 40 /80/100/120* | 40 /60/80/100/120* |
| **max. tool diameter** | 120 mm | 80 mm |
| **max. tool diameter without neighbour tools** | 240 mm | 150 mm |
| **max. tool length** | 400 mm | 300 mm |
| **max. tool weight** | 7kg/20 kg | 7 kg |
| **Dimensions:** | | |
| **Hydraulic tray** | 60 l | 60 l |
| **Cooling tray** | 500 l | 250 l |
| **IKZ** | 30 bar / 70 bar | 30 bar / 70 bar |
| **Chip conveyor** | Hinge* | Hinge* |
| **Required room space ( L / B )** | 7150 x 5200 | 5830 x 4581 |
| **Height** | 3510 | 2735 |
| **Weight** | 20 to | 12 to |